Contact type:

L = slow action

Contact blocks

		Working principle D, supplied with key release, emergency release button, without actuator			Working principle D, supplied with emergency release button, without actuator			Working principle E, supplied with emergency release button, without actuator		
		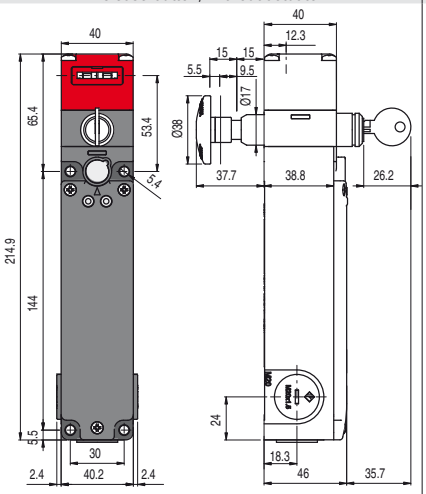			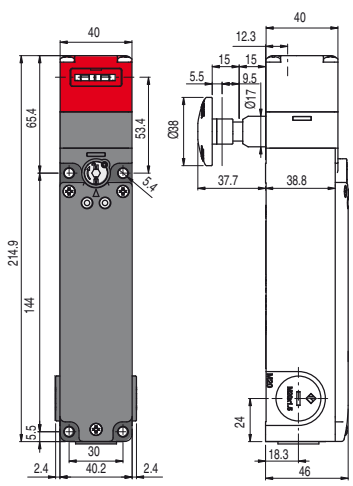			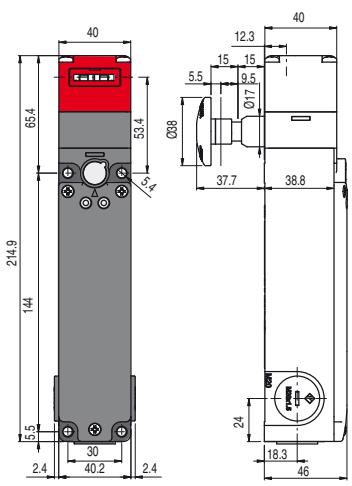		
60A	L	FG 60AD6D0A	1NO+1NC	1NO+1NC	FG 60AD7D0A	1NO+1NC	1NO+1NC	FG 60AD7E0A	1NO+1NC	1NO+1NC
60B	L	FG 60BD6D0A	2NC	1NO+1NC	FG 60BD7D0A	2NC	1NO+1NC	FG 60BD7E0A	2NC	1NO+1NC
60C	L	FG 60CD6D0A	3NC	1NC	FG 60CD7D0A	3NC	1NC	FG 60CD7E0A	3NC	1NC
60D	L	FG 60DD6D0A	1NO+1NC	2NC	FG 60DD7D0A	1NO+1NC	2NC	FG 60DD7E0A	1NO+1NC	2NC
60E	L	FG 60ED6D0A	1NO+2NC	1NC	FG 60ED7D0A	1NO+2NC	1NC	FG 60ED7E0A	1NO+2NC	1NC
60F	L	FG 60FD6D0A	1NO+2NC	1NO	FG 60FD7D0A	1NO+2NC	1NO	FG 60FD7E0A	1NO+2NC	1NO
60G	L	FG 60GD6D0A	2NC	2NC	FG 60GD7D0A	2NC	2NC	FG 60GD7E0A	2NC	2NC
60H	L	FG 60HD6D0A	4NC	/	FG 60HD7D0A	4NC	/	FG 60HD7E0A	4NC	/
60I	L	FG 60ID6D0A	3NC	1NO	FG 60ID7D0A	3NC	1NO	FG 60ID7E0A	3NC	1NO
60L	L	FG 60LD6D0A	2NO+1NC	1NC	FG 60LD7D0A	2NO+1NC	1NC	FG 60LD7E0A	2NO+1NC	1NC
60M	L	FG 60MD6D0A	2NO+1NC	1NO	FG 60MD7D0A	2NO+1NC	1NO	FG 60MD7E0A	2NO+1NC	1NO
60N	L	FG 60ND6D0A	1NO+1NC	2NO	FG 60ND7D0A	1NO+1NC	2NO	FG 60ND7E0A	1NO+1NC	2NO
60P	L	FG 60PD6D0A	1NC	3NC	FG 60PD7D0A	1NC	3NC	FG 60PD7E0A	1NC	3NC
60R	L	FG 60RD6D0A	2NO+2NC	/	FG 60RD7D0A	2NO+2NC	/	FG 60RD7E0A	2NO+2NC	/
60S	L	FG 60SD6D0A	1NC	2NO+1NC	FG 60SD7D0A	1NC	2NO+1NC	FG 60SD7E0A	1NC	2NO+1NC
60T	L	FG 60TD6D0A	1NC	1NO+2NC	FG 60TD7D0A	1NC	1NO+2NC	FG 60TD7E0A	1NC	1NO+2NC
60U	L	FG 60UD6D0A		4NC	FG 60UD7D0A		4NC	FG 60UD7E0A		4NC
60V	L	FG 60VD6D0A	2NC	2NO	FG 60VD7D0A	2NC	2NO	FG 60VD7E0A	2NC	2NO
60X	L	FG 60XD6D0A	1NO	3NC	FG 60XD7D0A	1NO	3NC	FG 60XD7E0A	1NO	3NC
60Y	L	FG 60YD6D0A	1NO	1NO+2NC	FG 60YD7D0A	1NO	1NO+2NC	FG 60YD7E0A	1NO	1NO+2NC
61A	L	FG 61AD6D0A		3NC+1NO	FG 61AD7D0A		3NC+1NO	FG 61AD7E0A		3NC+1NO
61B	L	FG 61BD6D0A		2NC+2NO	FG 61BD7D0A		2NC+2NO	FG 61BD7E0A		2NC+2NO
61C	L	FG 61CD6D0A		1NC+3NO	FG 61CD7D0A		1NC+3NO	FG 61CD7E0A		1NC+3NO
61D	L	FG 61DD6D0A	1NC	3NO	FG 61DD7D0A	1NC	3NO	FG 61DD7E0A	1NC	3NO
61E	L	FG 61ED6D0A	1NO	1NC+2NO	FG 61ED7D0A	1NO	1NC+2NO	FG 61ED7E0A	1NO	1NC+2NO
61G	L	FG 61GD6D0A	2NO	1NC+1NO	FG 61GD7D0A	2NO	1NC+1NO	FG 61GD7E0A	2NO	1NC+1NO
61H	L	FG 61HD6D0A	2NO	2NC	FG 61HD7D0A	2NO	2NC	FG 61HD7E0A	2NO	2NC
61M	L	FG 61MD6D0A	3NO	1NC	FG 61MD7D0A	3NO	1NC	FG 61MD7E0A	3NO	1NC
61R	L	FG 61RD6D0A	3NC+1NO		FG 61RD7D0A	3NC+1NO		FG 61RD7E0A	3NC+1NO	
61S	L	FG 61SD6D0A	1NC+3NO		FG 61SD7D0A	1NC+3NO		FG 61SD7E0A	1NC+3NO	
Min. force		30 N (60 N)			30 N (60 N)			30 N (60 N)		
Travel diagrams		page 103 - group 1			page 103 - group 1			page 103 - group 1		

Items with code on **green** background are stock items

Accessories See page 287